# GRAZ

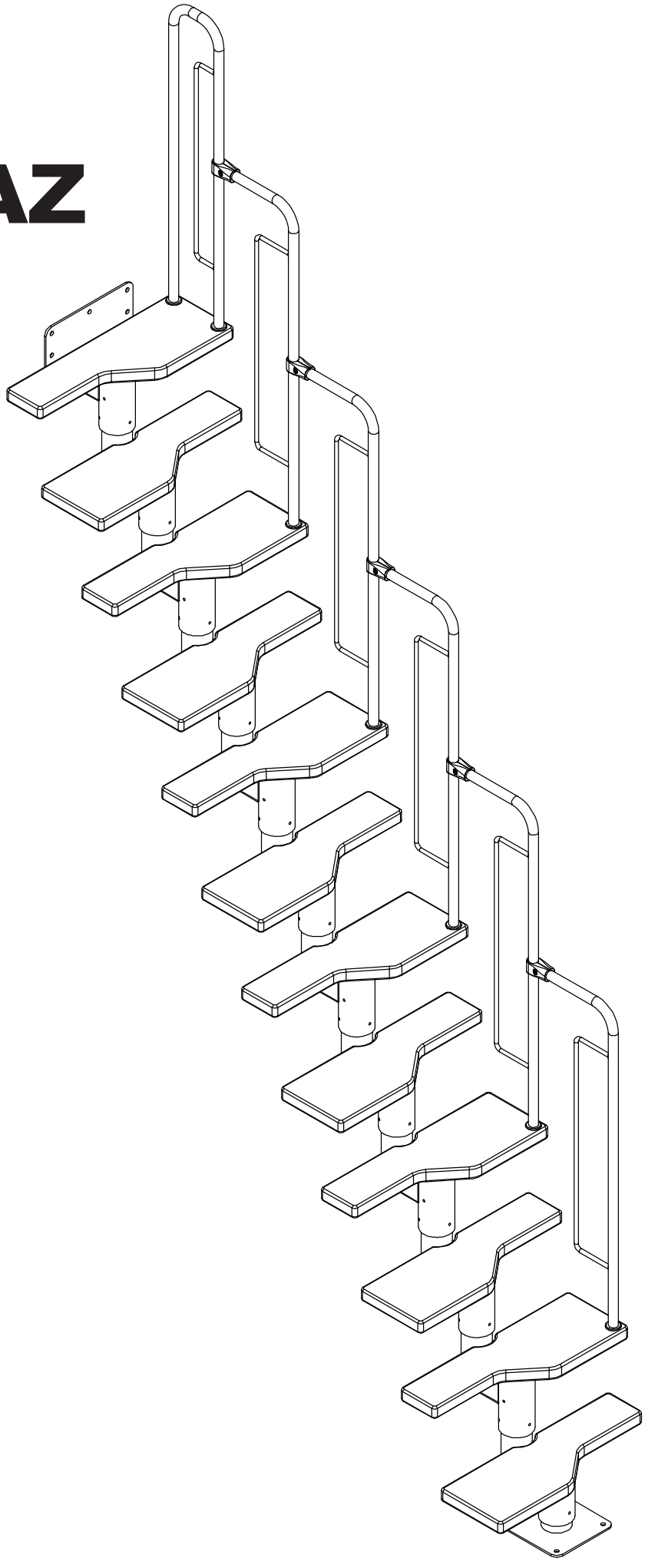

A ×1

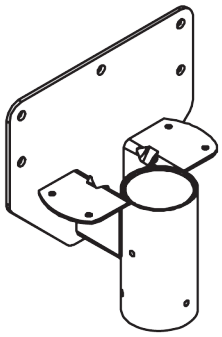

**K2 11240**

B ×10

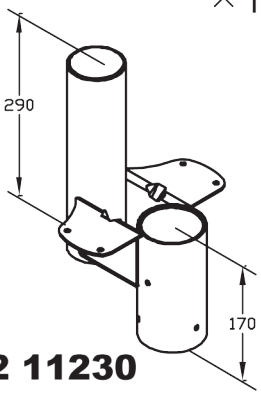


**K2 11230**

C ×1

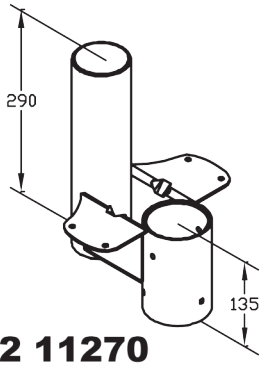


**K2 11270**

D ×1

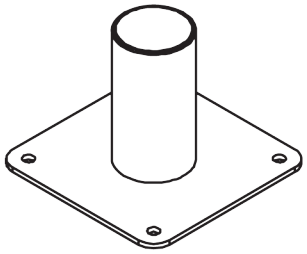

**K2 11250**

E ×1

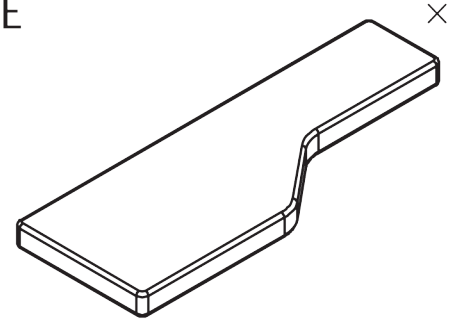

**K1 11010**

F ×11

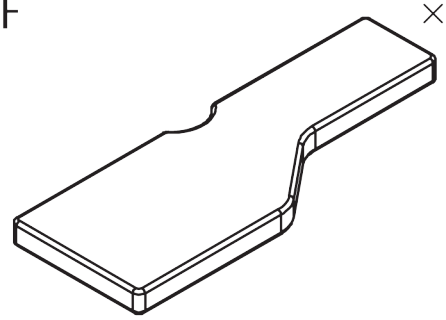

**K1 11020**

G ×1

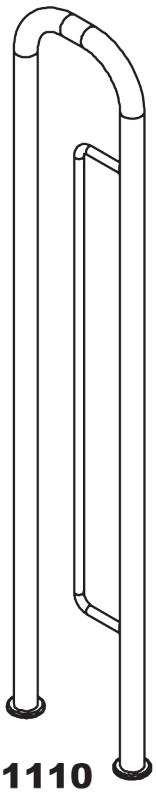

**K2 11110**

Q ×48

6 x 30 mm

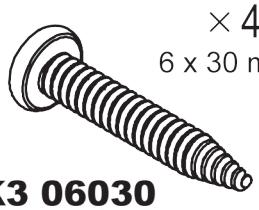

**K3 06030**

I ×5

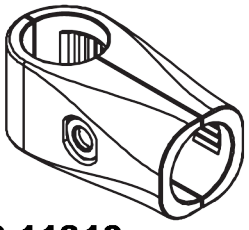

**K2 11310**

H ×5

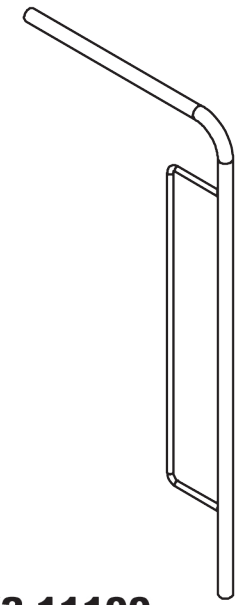

**K2 11100**

P ×9

8 x 70 mm

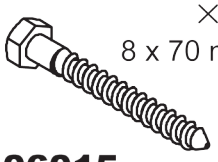

**K3 06015**

M ×7

10 x 70 mm

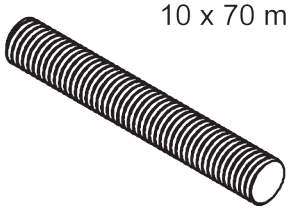

**K3 07008**

O ×9

10 x 60 mm

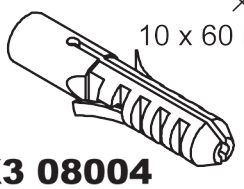

**K3 08004**

J ×7

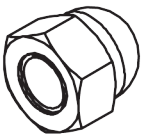

**K3 03010**

R/S ×1 / ×1

**K3-10004 / K3-10006**

T ×1

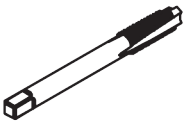

**K3 10010**

N ×60

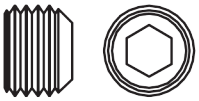

**K3 05003**

K ×9

**K3 04028**

L ×7

**K3 04030**

# BEFORE INSTALLATION

**IMPORTANT:**

**Before starting installation**, calculate the exact rise height for each step.
This can be done by dividing the ceiling height (from the top edge of the floor to the top edge of the next floor) by the number of rises. The number of rises is the same as the number of steps + 1.

| No. of rises: Ceiling height divided by 19 | No. of steps: One less than no. of rises | Landing space for straight flight (cm) | Ceiling height: minimum to maximum |
|---|---|---|---|
| 12 | 11 | 160 | 222-270 |
| 13 | 12 | 173 | 240-292 |

## BB =

Example: Top edge of floor to top edge of next floor = 263 cm. 12 rises (11 steps + 1).
263 cm divided by 12 = 21.91 cm. This is the rise height per step.

The aperture in the ceiling should not be less than 130 cm for straight flights of steps.
This is to ensure that walking up the steps is a comfortable experience.
Possible rise height: 18.5 to 22.5 cm
Recommended rise height: 18.5 to 20.5 cm

# INSTALLATION

Top step element

## AA =

Measure (from the top edge of the top floor) the calculated rise height plus the thickness of one step (e.g. step 3.5 cm thick plus calculated rise height 21,91 cm = 25,41 cm).
This is the installation height for the top edge of the step support in the top element.
Please look at page 4 - BB: Is the calculated rise height e.g. 21,91 cm

It’s important to support the staircase temporarily during mounting, as the tare weight of the staircase before fastening to the floor otherwise can make it skew - please see page 5.

NB – VERY IMPORTANT WHEN MOUNTING OUTSIDE BANISTER
If the staircase is mounted with a turn, please note that the distance between the banister elements may vary from 135 mm till 345 mm when mounting the outside banister.

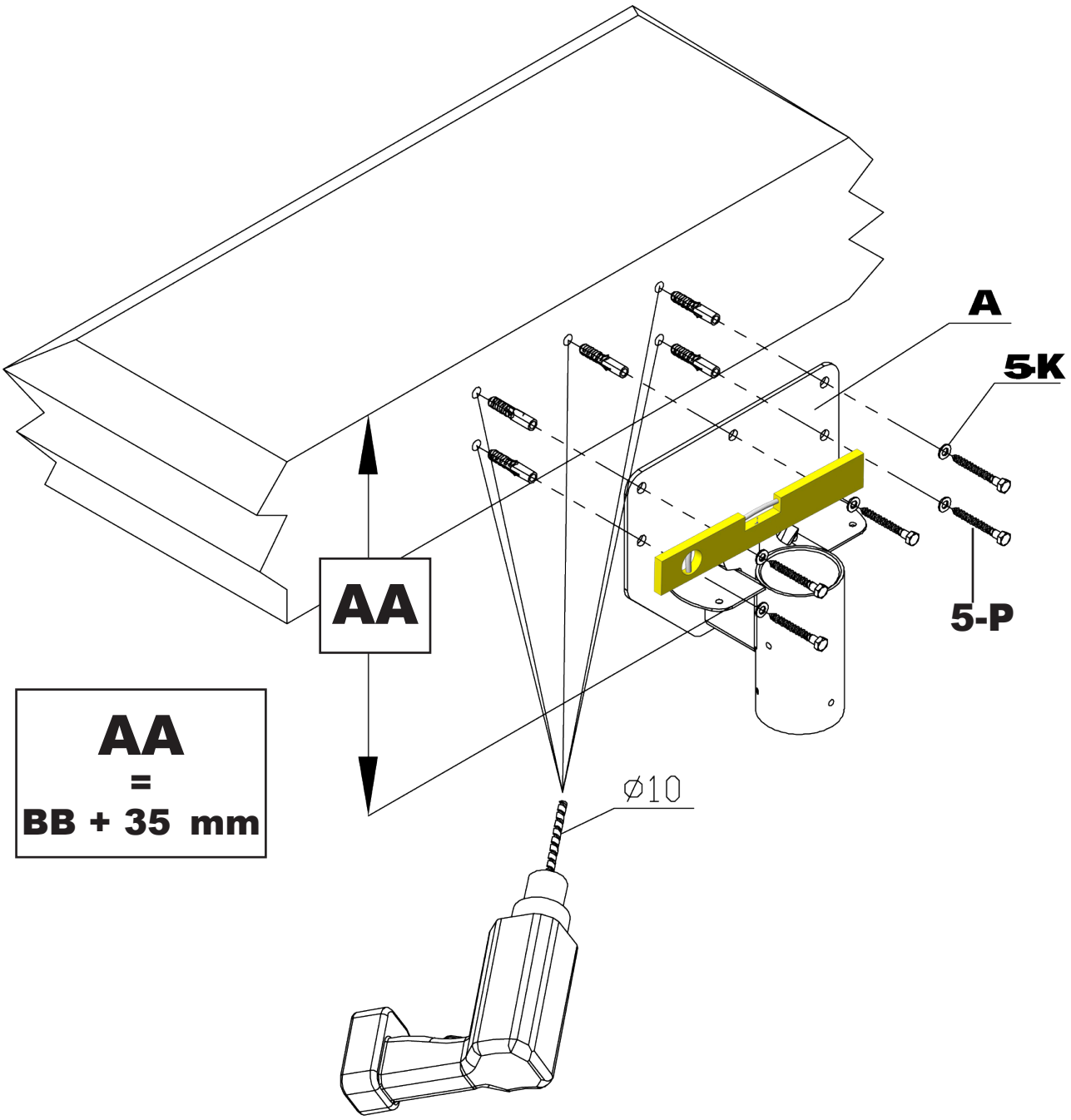
A
5K
5-P
AA
AA
=
BB + 35 mm
Ø10

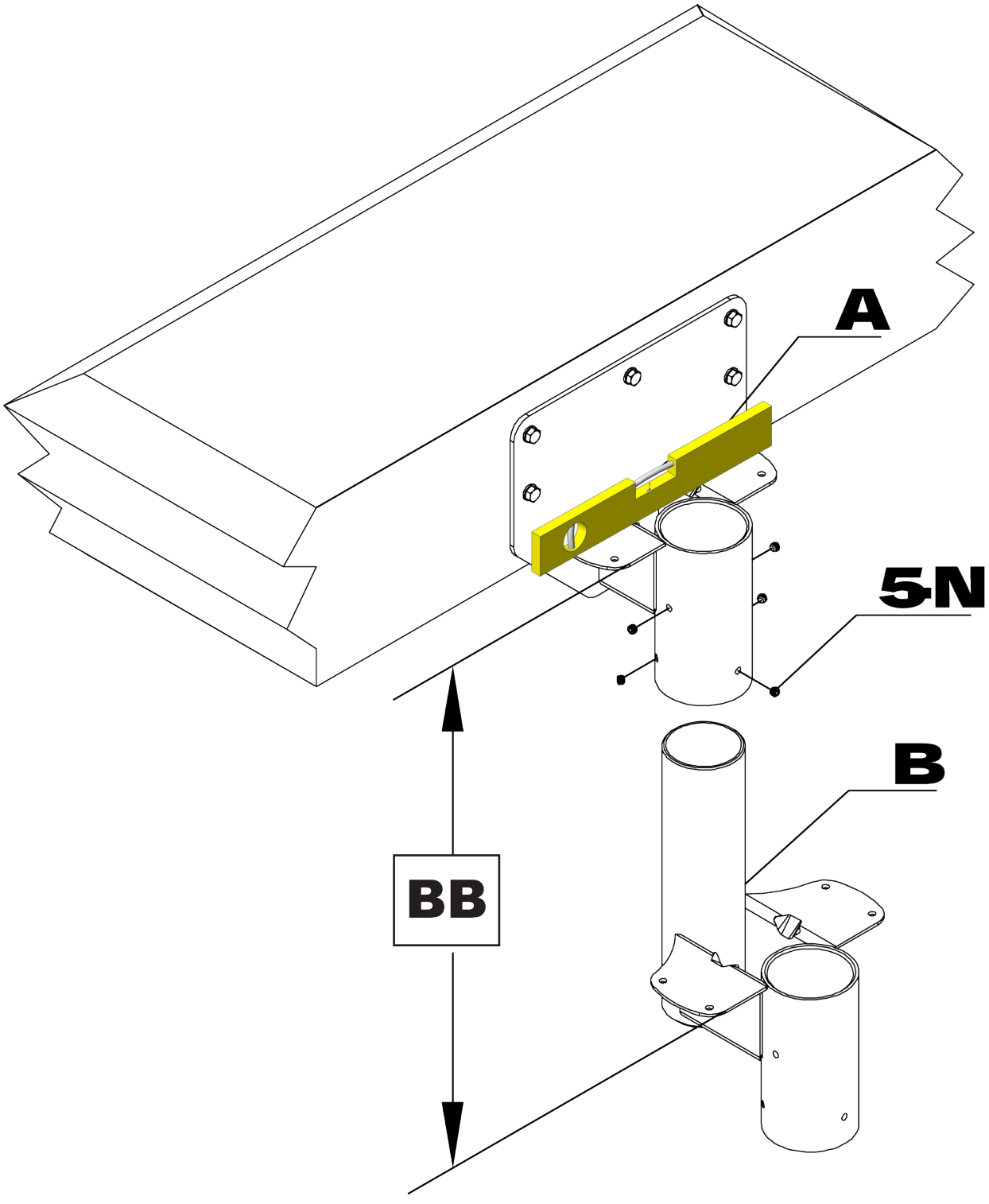
A
5N
B
BB

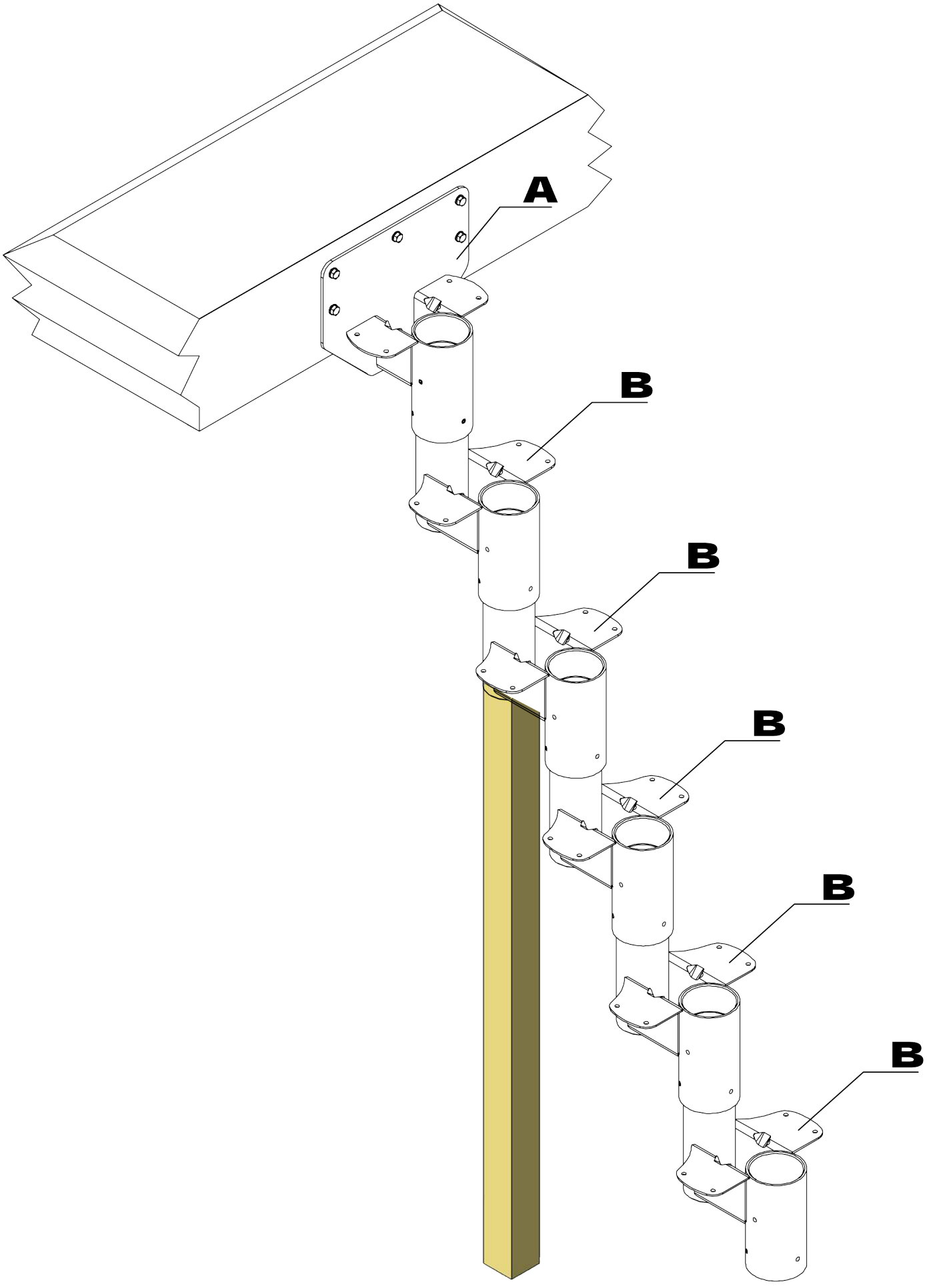
A
B
B
B
B
B

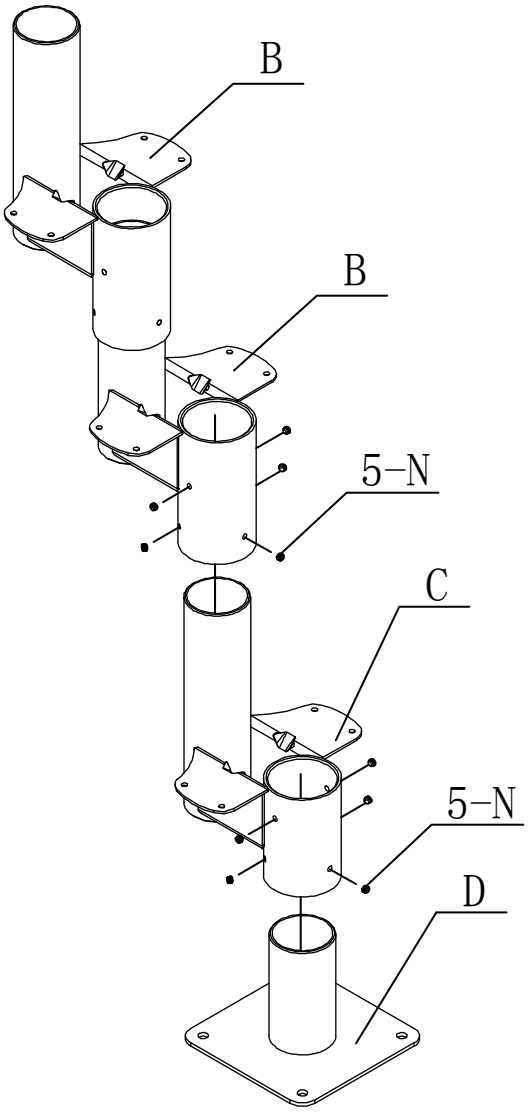
B
B
5-N
C
5-N
D

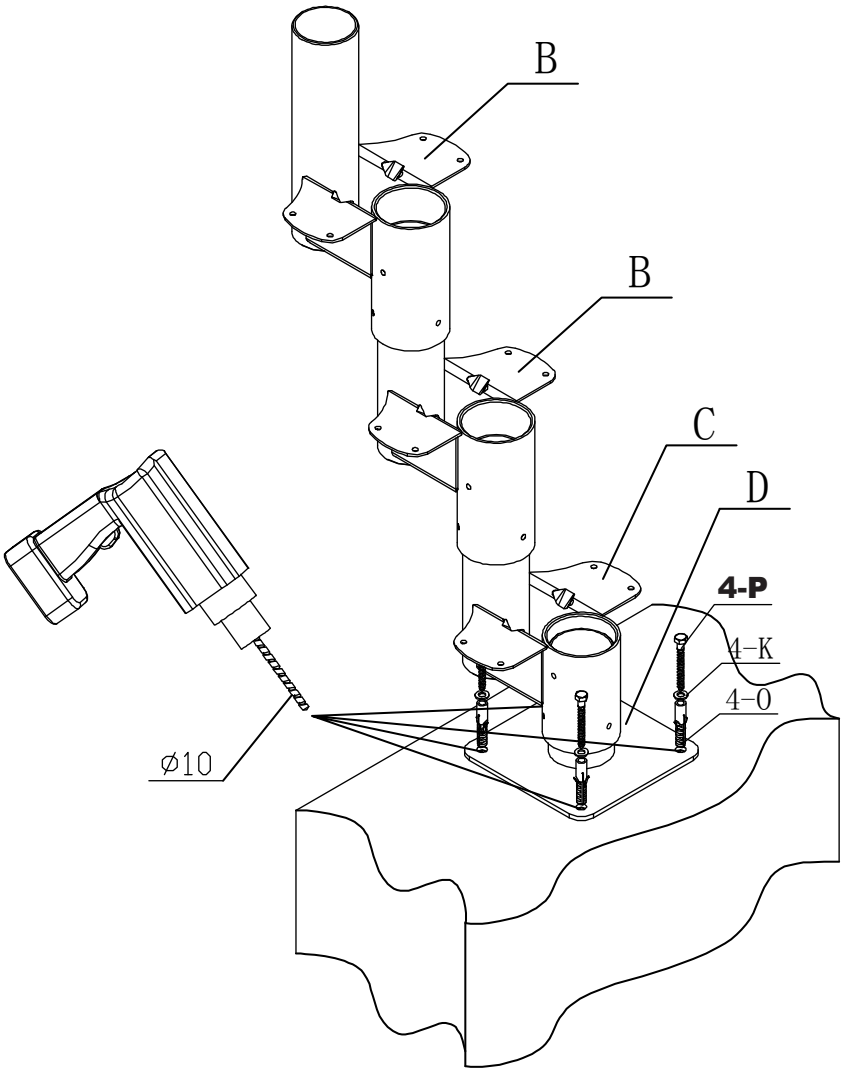
B
B
C
D
4-P
4-K
4-O
ø10

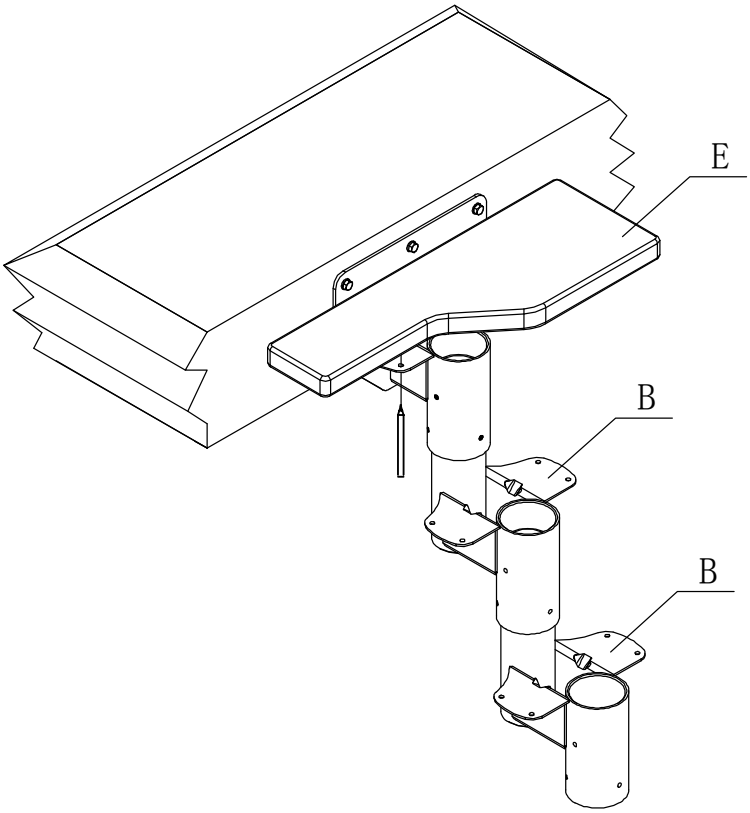
E
B
B

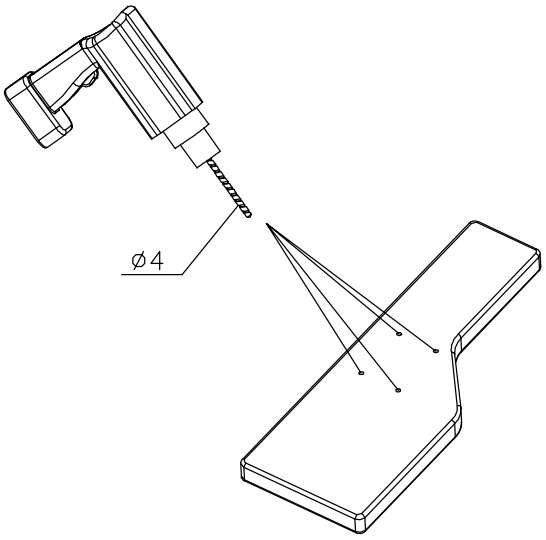
ø4

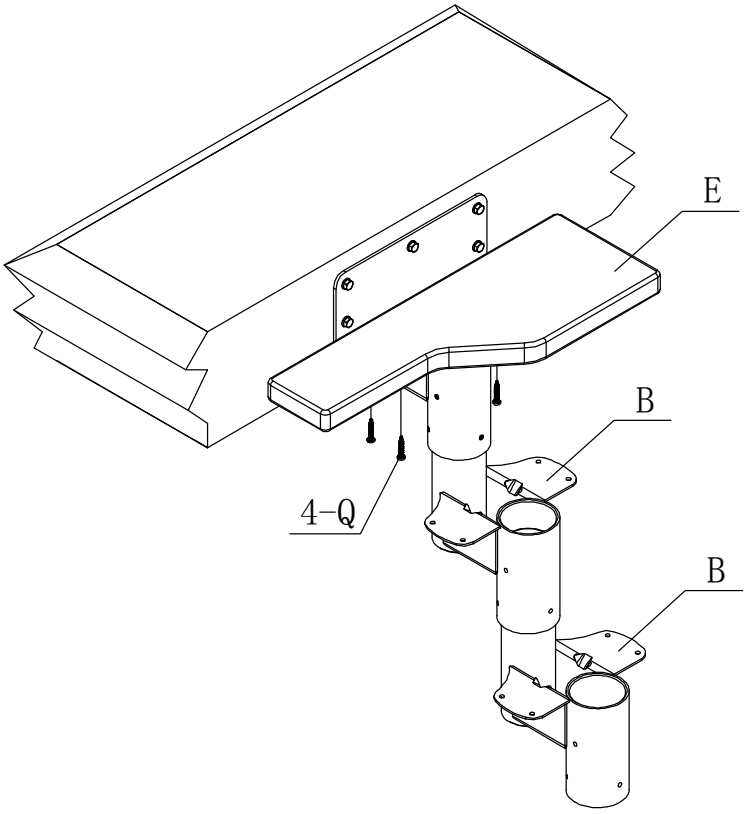
E
B
4-Q
B

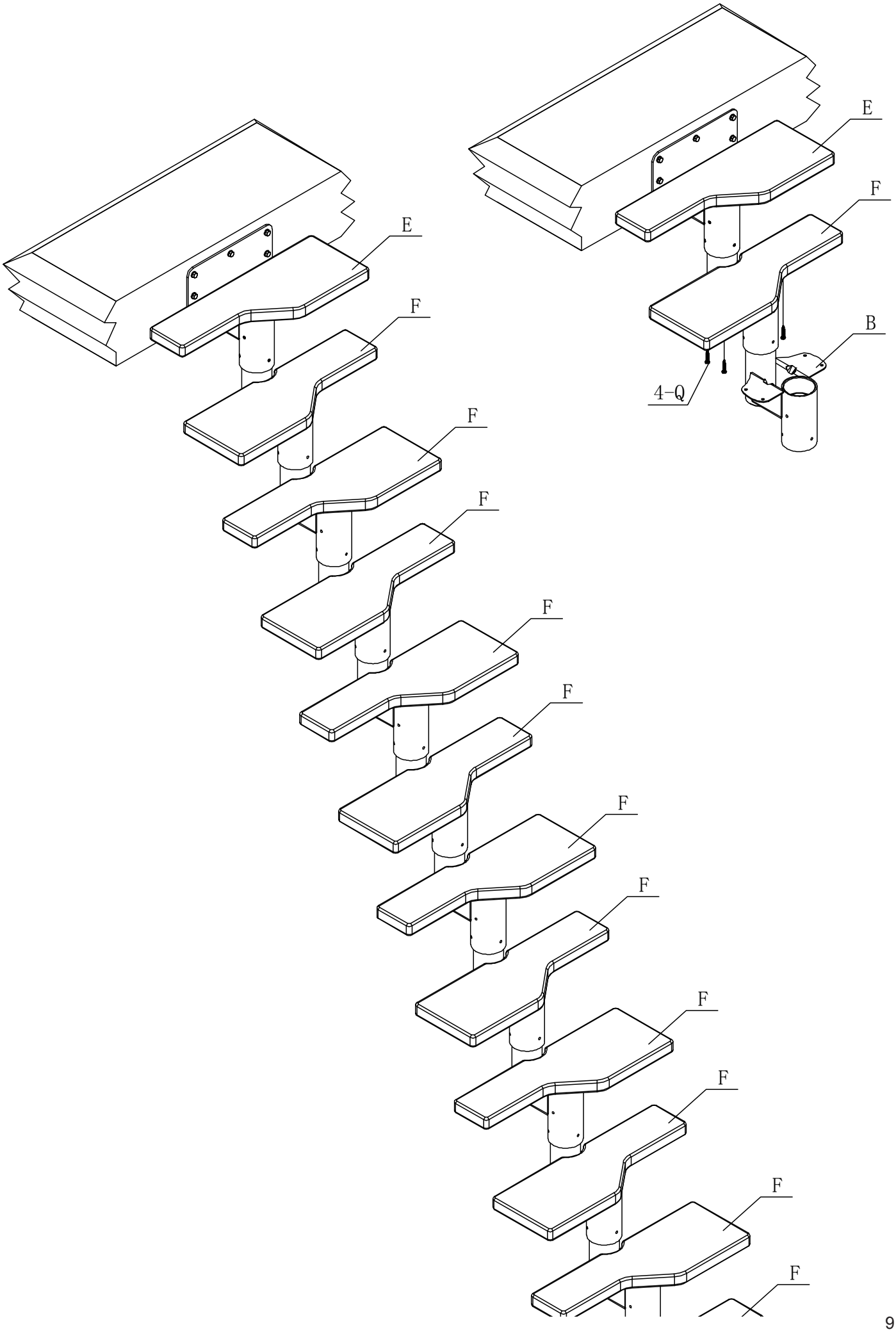
E
F
F
F
F
F
F
F
F
F
F
F
F
E
F
B
4-Q

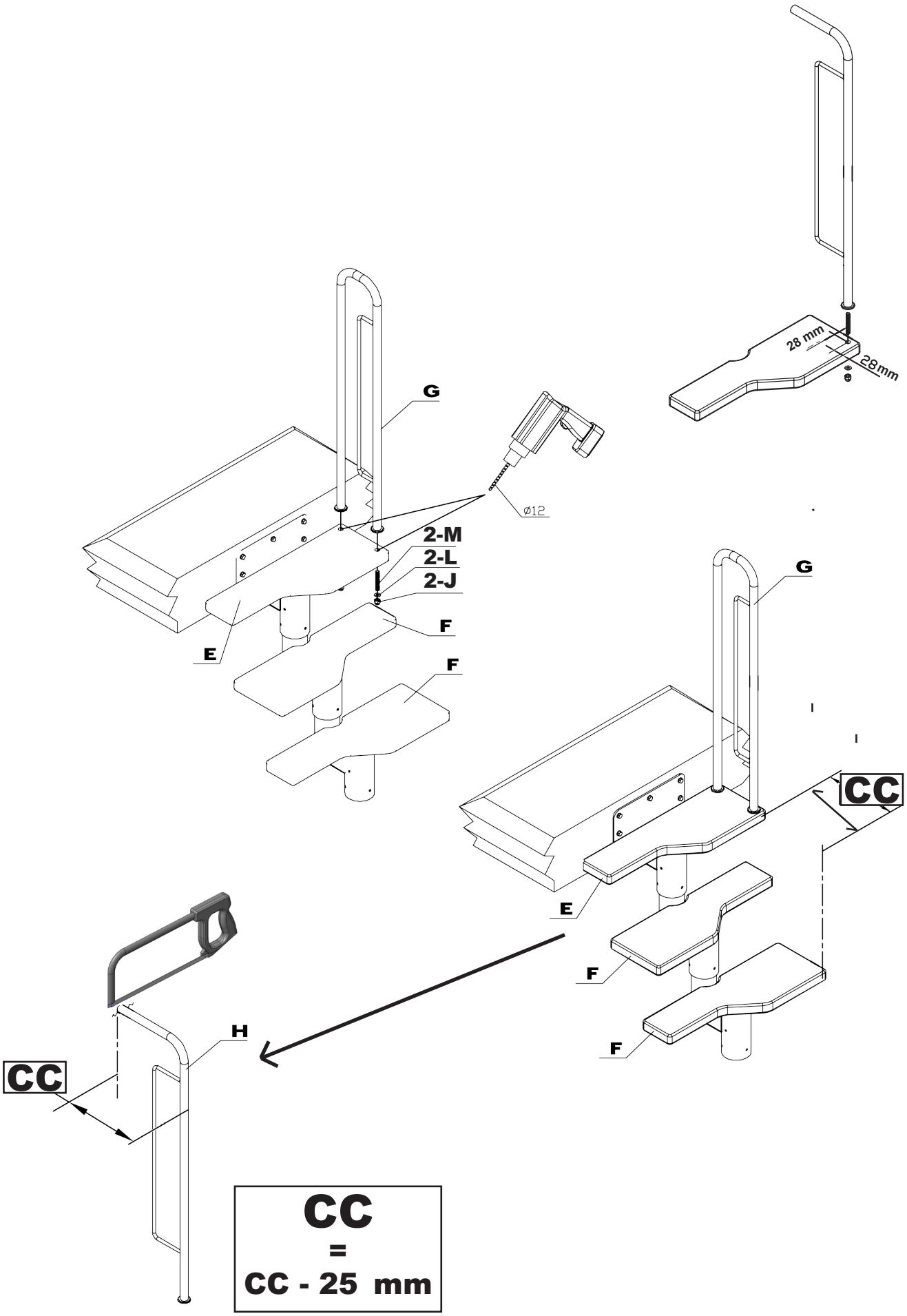
28 mm
28mm
G
Ø12
2-M
2-L
2-J
F
E
F
G
CC
E
F
F
H
CC
CC
=
CC - 25 mm

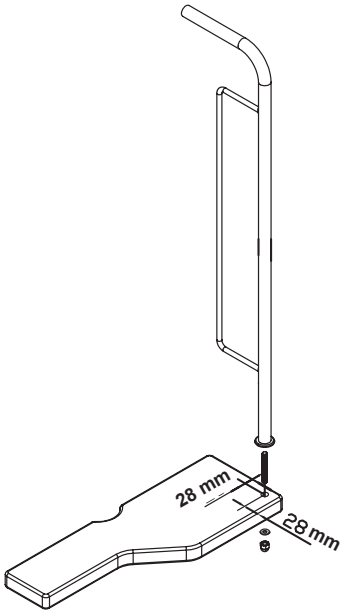


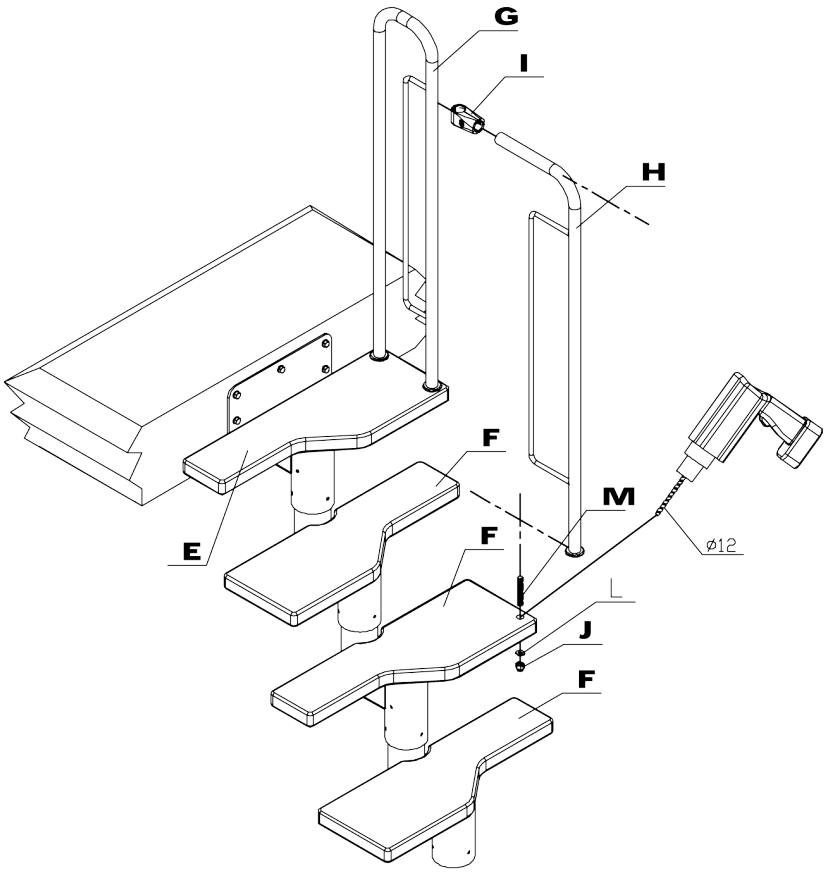


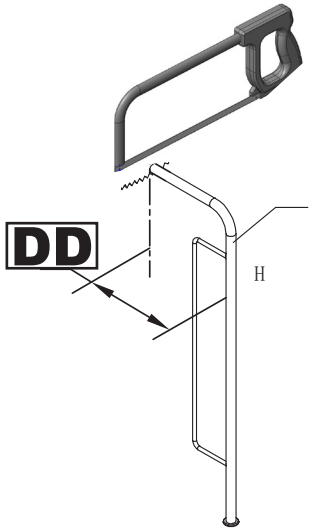


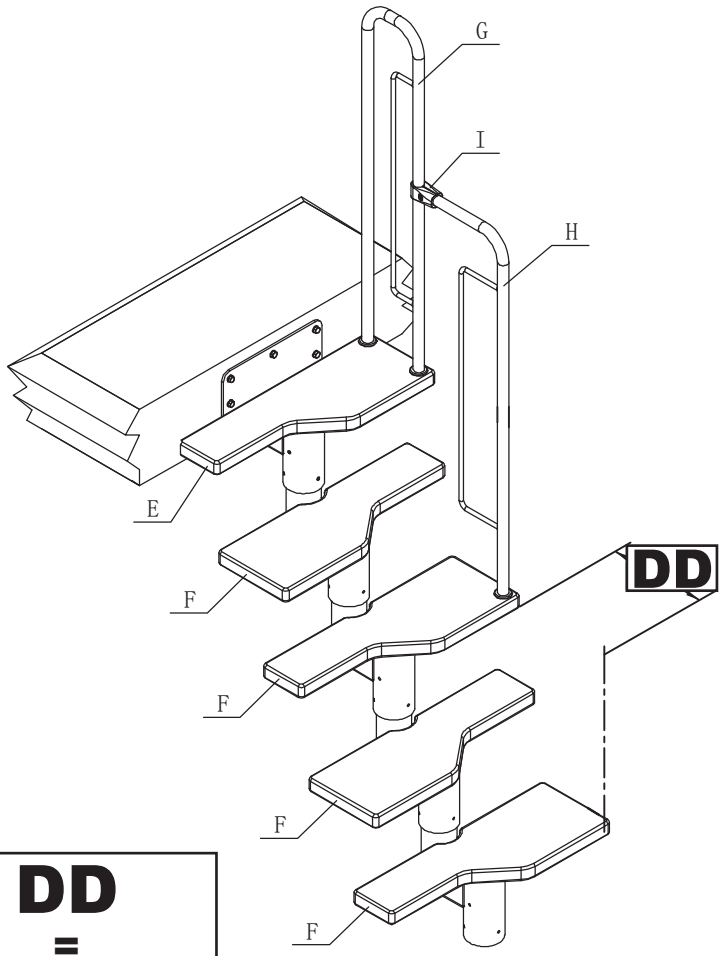


**DD**
**=**
**DD - 25 mm**

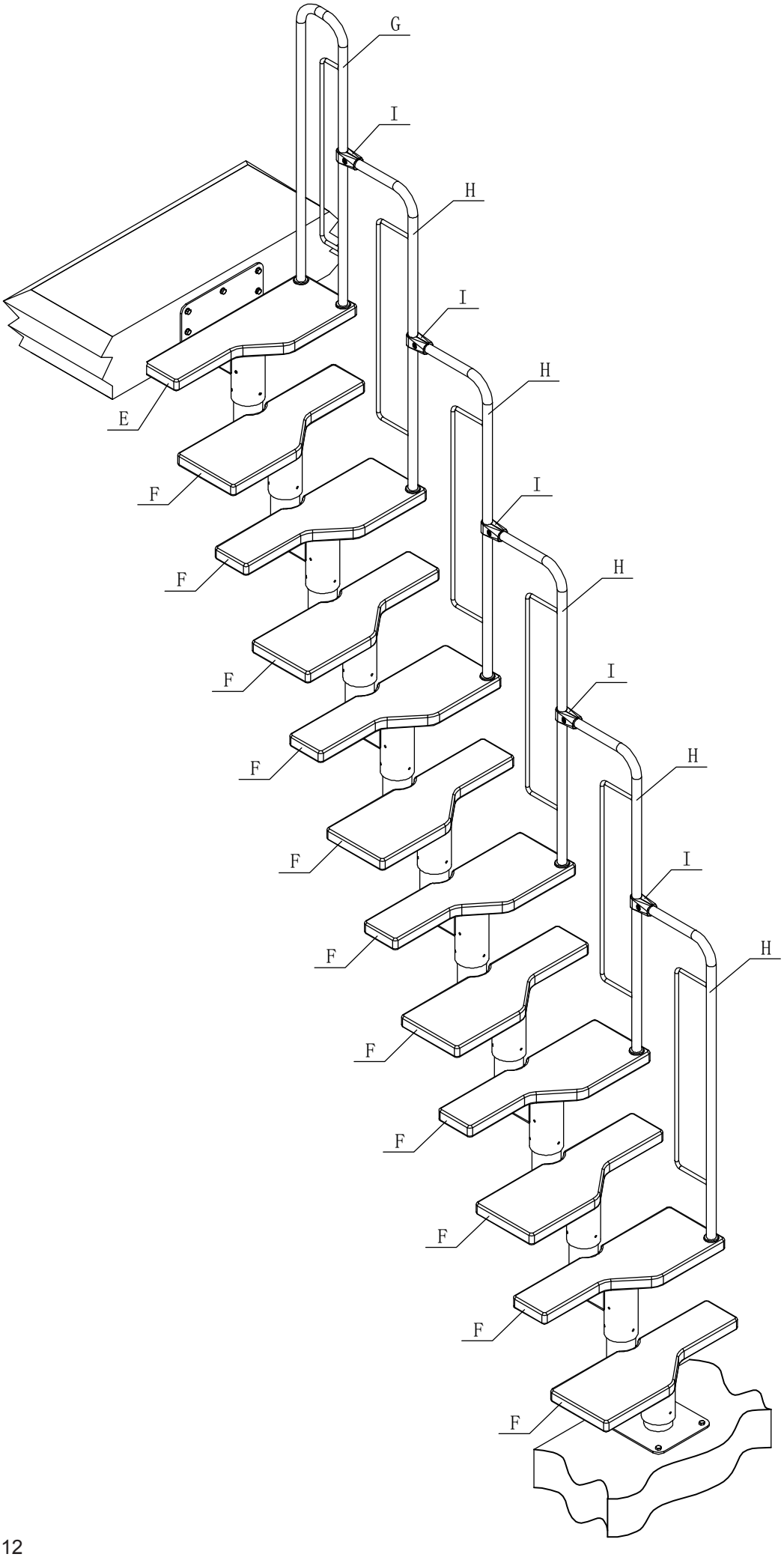
G
I
H
I
H
E
F
I
F
H
F
I
F
H
F
I
F
H
F
F
F
F